Husqvarna®

SPARE PARTS LIST

ACCESSORIES AND TOOLS

MULCH KIT 61, 965894002, 2008-08

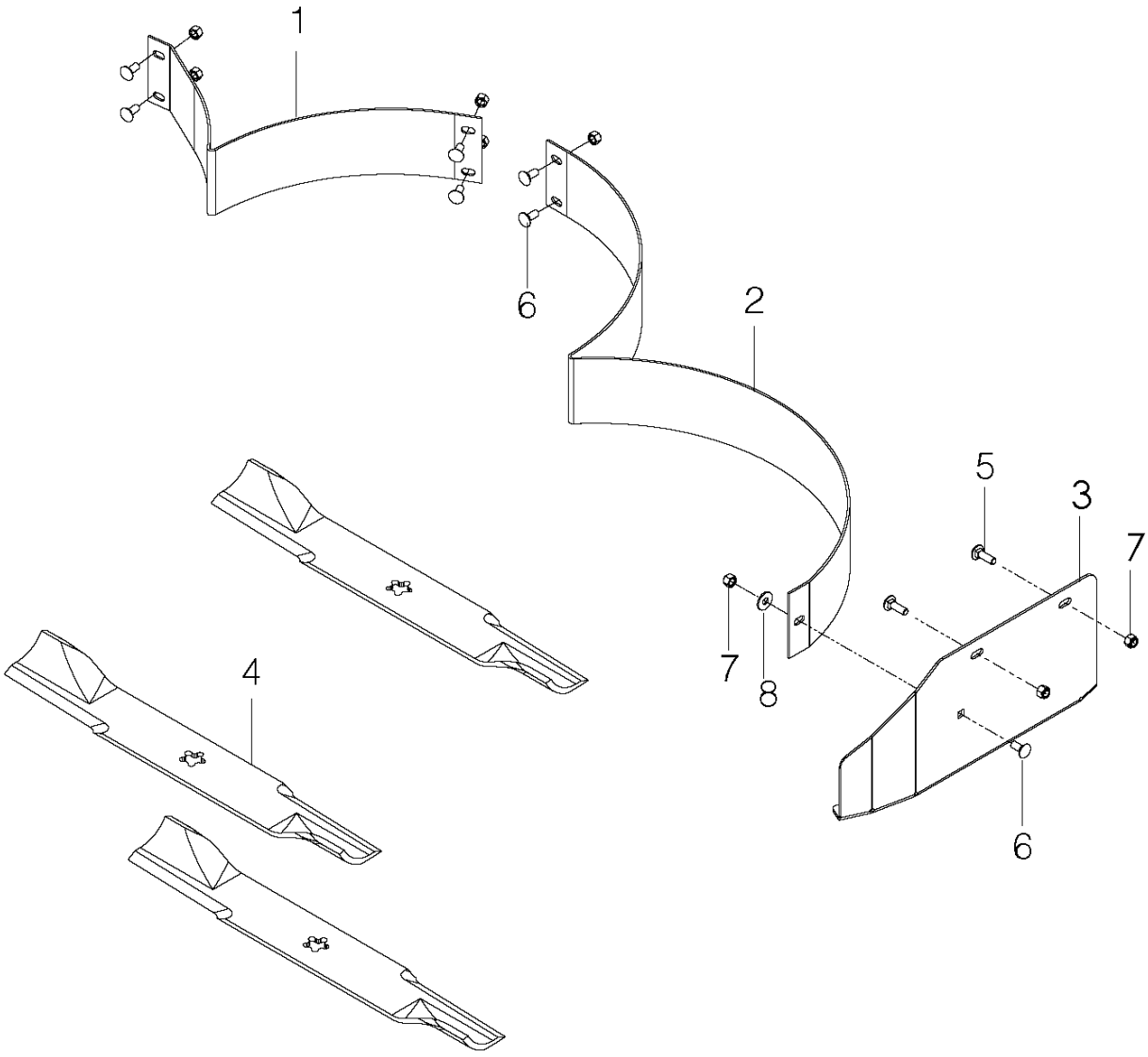
1
6
2
5
3
7
7
8
4
6

Ref	Part No	Description	Remark	QTY KIT
1	539 11 33-13	61 MULCH BAFFLE - LH, BLACK	LEFT	1
2	539 11 33-15	61 MULCH BAFFLE - RH, BLACK	RIGHT	1
3	539 11 33-27	61 MULCH CAP BLACK		1
4	521 98 16-01	BLADE		3
5	872 14 05-08	BOLT		2
6	872 14 05-06	BOLT		7
7	873 80 05-00	LOCK NUT		9
8	539 99 06-92	WASHER		1